zeligsoft

Zeligsoft CE™ 2.4

DataSheet

Zeligsoft CE — the SCA Backbone Development Tool

Zeligsoft CE is a model-driven development tool that forms the backbone of the Software Communications Architecture (SCA) development process. Zeligsoft CE validates against the SCA rules at the architectural level and generates correct-by-construction SCA compliant artifacts such as XML descriptor files and documentation. CE enables SCA and non-SCA software aspects to be developed together, integrated early, and executed often. CE reduces risk in Software Defined Radio (SDR) development resulting in faster time-to-market, cost control and better software quality.

New in this Release

- Multiple application views
- Component deployment reports
- SCA test

Model with Zeligsoft CE

Zeligsoft CE provides visual modeling for all project stakeholders. Powerful visual representation of SCA concepts ensures that every project team member has a global understanding of the system and can produce correct SCA artifacts. CE supports modeling of components, applications (waveforms), devices, platforms, and deployment of waveforms on target platforms.

With SCA systems being dependant on multiple devices having enough resources and capacity to run the intended applications, it is vital that all applications are modeled with their planned platform. Modeling deployments throughout the development cycle with Zeligsoft CE allows the project team to specify and track the deployment explicitly, and ensure that untested deployments are never realized in the field.

- Model components, applications, devices, nodes, platforms, deployments
- UML 2.0-based — system architecture clearly understood
- Intuitive definition of application-to-platform relationships
- Guides the usage of SCA constructs
- Define SCA constructs in seconds
- Intuitive navigation — hyperlinks, context-sensitive menus, cross-linking
- Integration with configuration management tools — manage model elements like any software artifact
- define multiple views into the application

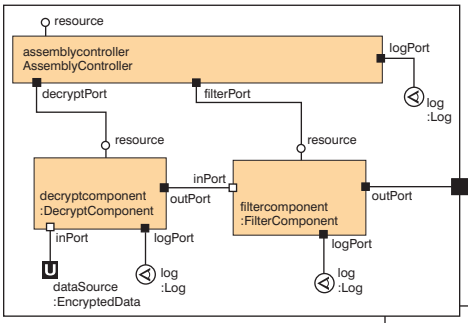

Full application view

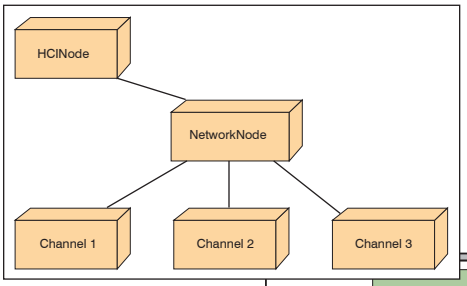

Platform

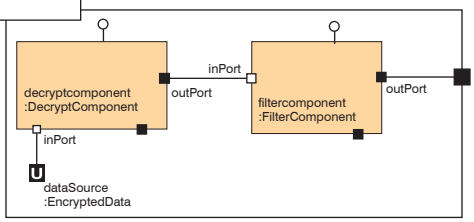

Data flow view

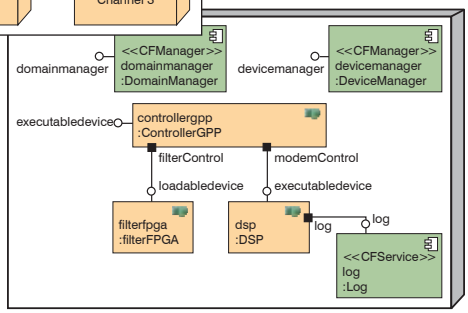

Node with devices

Benefit from complete SCA system modeling — components, applications, nodes, platforms, deployments.

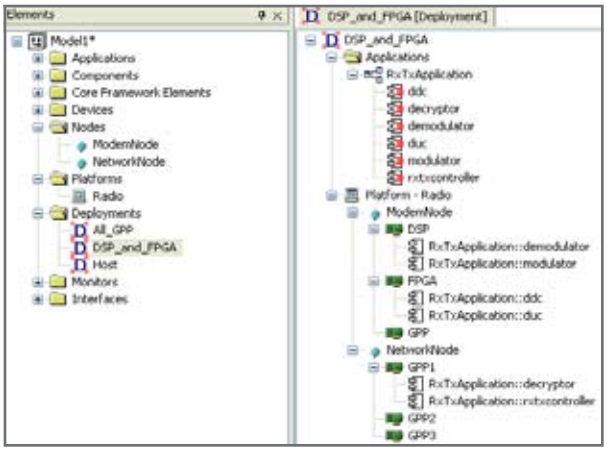

Model applications deployed to platforms.

Validate with Zeligsoft CE

Zeligsoft CE allows developers to produce SCA compliant software from day one. Validation is built right into Zeligsoft CE providing automatic identification of errors in SCA-compliant radio platforms and waveform applications. In addition to checking the syntax of the Document Type Definition (DTD), CE validates the semantic correctness of the model. Errors are presented along with a hyperlink to the model construct that violates the SCA standard and a reference to the relevant section of the SCA standard. CE also provides suggestions for correcting the violation.

Many SCA projects involve the integration of legacy and 3rd party waveforms. CE facilitates integration by allowing developers to import complete or partial sets of SCA descriptor files (XML), validate them against the SCA standard for correctness, and assemble them into a complete and valid application or platform. Zeligsoft CE provides a complete development environment for SCA compliant software, validating at every stage, up to and including deployment.

- Automatically validate for SCA compliance — applications (waveforms), platforms, deployments
- Validate model for syntactical and semantic correctness
- Import and validate 3rd party and legacy components, applications, devices, nodes
- Complete validation of SCA deployments
- Guidance on resolving SCA violations with links to cause and suggested modifications
- Enhanced validation with standards cross-reference

De-risk projects by validating early on, and throughout the development cycle.

Generate with Zeligsoft CE

Zeligsoft CE provides push-button generation of correct-by-construction descriptor files and documentation. By automatically generating the complete set of SCA compliant descriptor files, i.e. the entire SCA Domain Profile, development time can be reduced from months to days. Generating documentation improves communication between team members. Documentation generation through CE is completely customizable. Developers can produce documentation relating to a specific view, for example, a list of all components in the waveform or a description of an intended deployment.

Zeligsoft CE generates the complete set of valid deployments, i.e. assignment of software components to hardware devices, so that all deployments that could possibly occur in the field can be thoroughly assessed and tested beforehand.

Detailed deployment reports can also be generated, providing insight into the full set of possible component-device matches, as well as components which cannot be deployed, given the application and target platform under consideration.

Automated generation of code implementing SCA component structure is provided through Zeligsoft's Code Generator (per user license required). See the Code Generator data sheet for details.

- Push-button generation of the complete set of SCA XML descriptors
- Fully customizable documentation generation
- Scripting interface used for integration with build process
- Generate the complete set of possible deployments to be verified and ensured in fielded systems
- Generate deployment reports on possible component-device assignments

Accelerate and de-risk SCA development by generating correct-by-construction SCA artifacts.

Generate correct-by-construction descriptor files.

Execute with Zeligsoft CE

In an SCA radio, the actual deployment of software components to hardware devices is done at system initialization time. For this reason, developers require features that enable them to connect to the SCA Core Framework (CF) to thoroughly test their application running live. In addition to features for SCA development, the CE environment contains comprehensive features allowing developers to quickly and easily test and debug their components and applications.

Zeligsoft's runtime monitor allows users to start the SCA CF, load an application to a platform and inspect it in real-time. With runtime monitoring, developers can see if the deployment they expected to have is actually the one dynamically created by the CF. Users can also take their deployment design models and explicitly enforce them during runtime. This feature ensures that all specific test cases are executed thoroughly.

Zeligsoft's runtime monitoring feature can be connected to any SCA compliant operating environment (OE). For example, it will run on a PC development host equipped with a PC compatible middleware suite. This is especially beneficial because it allows developers to test their deployments very early on in the development cycle. The run-time monitor will communicate with an embedded target's OE, for testing on the actual target.

The runtime monitor allows multiple applications to be started and stopped with the click of a button. Users can load their SCA platform with many applications, better representing what is likely to happen in the field. Previously set values, such as component properties, can be adjusted on-the-fly so that users can change the behavior of the waveform as it is running, and continue observing it.

CE captures logs generated by the CF (if available) and presents them to the user within CE's UI.

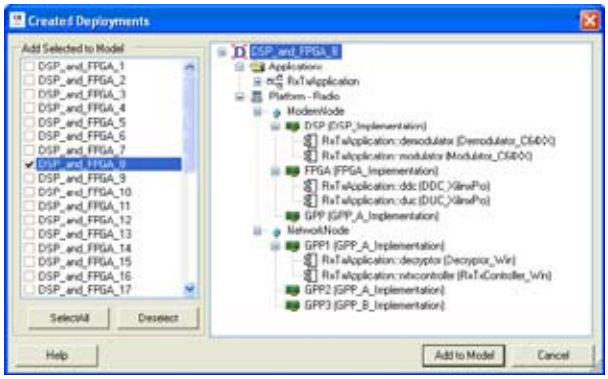

Generate the set of possible deployments of applications to platform.

Deployment Support Highlights

Deployment analysis through modeling, validation and generation is a foundational feature of the Zeligsoft CE toolset. Unique in the industry, Zeligsoft CE delivers key capabilities in making and understanding application to platform deployment decisions. These include:

- Automatic and manual analysis
- Complete deployment calculations
  - Complete application
  - Component by component
  - Partial deployments
- Validation of deployments
  - RTOS and processor dependencies
  - Capacity constraints
  - Connections of application to platform
- Deployment enforcement
- Detailed, customizable reports on component-device deployments

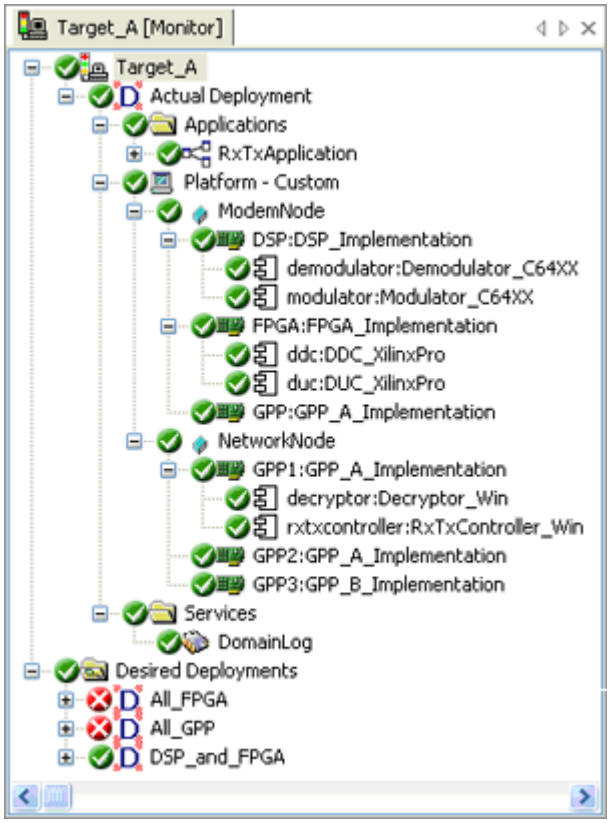

Monitor the application running on target — integrate early, execute often.

Also available from Zeligsoft is an SDR Development Suite comprising Zeligsoft CE plus a complete SCA operating environment designed to run on a PC host. Users can observe their applications deployed on a commercial-grade SCA CF in record time. See the Zeligsoft SDR Development Suite data sheet for more details.

- Start and stop SCA Core Framework on host within CE environment
- Load and unload multiple applications
- Support for development hosts and embedded targets
- Use design model to force particular deployment
- Adjust component properties while application is running

Monitor the component system on its actual target, with the platform running multiple applications, for complete system testing.

Test with Zeligsoft CE

Automated testing of components and subsystems of an application (waveform) is provided with Zeligsoft CE, through the Zeligsoft SCA Test add-in (separate license required). Generating specific code for testing the developed components for SCA compliance is critical to ensuring delivered components meet the runtime characteristics demanded by the standard. Zeligsoft SCA Test allows users to generate, compile and execute test code, and view test results directly from the toolset. All tests can be executed on host or target systems. See the Zeligsoft SCA Test datasheet for further details.

- SCA Component Test: test the component for compliance with the SCA standard
- SCA Functional Test: test the component for compliance with functional requirements
- SCA Scenario Test: test the interaction of components against specified scenarios

Test early and often to minimize development risk.

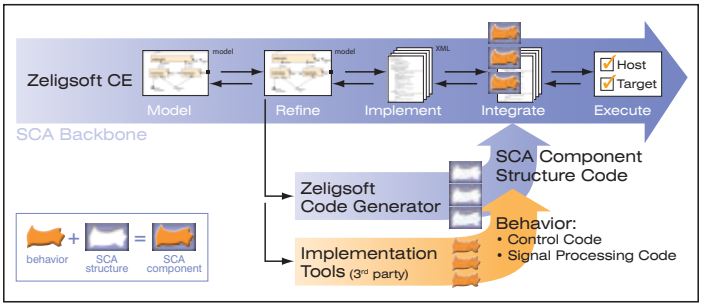

Zeligsoft CE is the SCA backbone development tool.

Support and Professional Services

Zeligsoft offers comprehensive professional services and training for the SCA, Zeligsoft CE, Code Generator, SDR Development Suite and SCA Test.

System Requirements

- CPU speed 1.6 Ghz
- Windows 2000 Professional service pack 4
- Windows XP Professional service pack 2
- MS .NET Framework 1.1 Service Pack 1
- 512 MB Memory
- 100 MB free hard disk space

Ordering Information

SDR-CE Starter Kit CE-2000
SDR-CE Project Kit.....CE-3000

Zeligsoft, Zeligsoft CE are trademarks of Zeligsoft Inc. Version 2.3 Printed in Canada © Copyright 2006.